MICRO SWITCH
A DIVISION OF MINNEAPOLIS-HONEYWELL REGULATOR COMPANY
FREEPORT, ILLINOIS
FED. MFR. CODE 91929

SWITCH – ENCLOSED

CATALOG LISTING
51ML1

THIS DRAWING COVERS A PROPRIETARY ITEM AND IS THE PROPERTY OF MICRO SWITCH, A DIVISION OF HONEYWELL. THIS DRAWING IS NOT TO BE COPIED OR USED WITHOUT THE APPROVAL OF MICRO SWITCH.

(M) 51ML1 ISSUE 4 REPLACES
51ML1 RELEASE NO.
M DRAWING NUMBER
ISSUE 14
CHECK
G.C.H. 24 OCT. 56 CHECK
DRAWN R. L. Z. 12 OCT. 56
74-963

REVISIONS

A	CO 8520	R. L. Z. 12 OCT. 56
B	CORR.	L. C. S. 11 OCT. 57
C	C011247	G. C. H. 21 FEB 58
D	C012789	M. B. F. 14 MAY 58
E	C018841	H B W 20 JAN 65
F	C020578	M B F 30 NOV 65
G	C026064	M B S 25 JUNE 69
H	C052194	G J W 22 SEP 83
J	C055051-B	J A P 14 DEC 84
K	C074287	G J W 22 APR 93

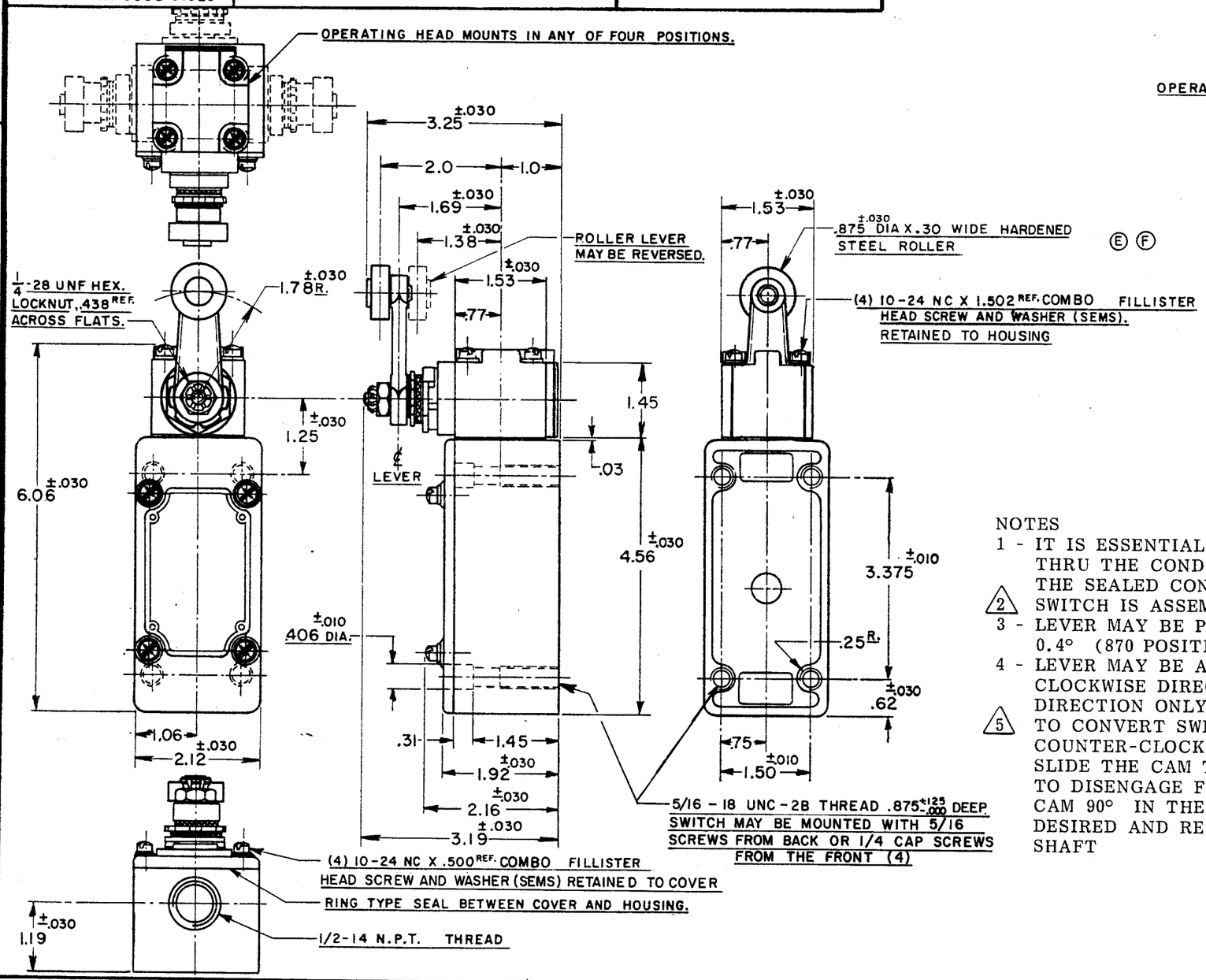

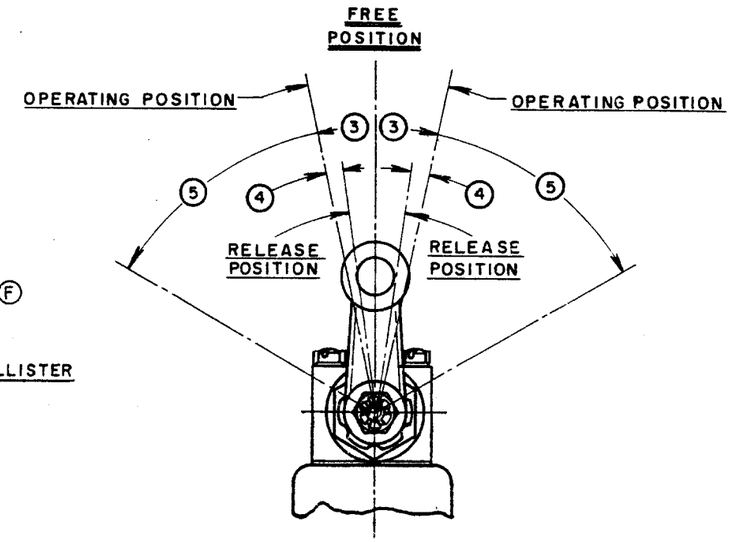

NOTES

1 - IT IS ESSENTIAL TO PREVENT ENTRANCE OF HARMFUL AGENTS THRU THE CONDUIT OPENING TO OBTAIN THE FULL BENEFIT OF THE SEALED CONSTRUCTION PROVIDED IN THIS UNIT

△2 SWITCH IS ASSEMBLED FOR ACTUATION IN EITHER DIRECTION

3 - LEVER MAY BE POSITIVELY LOCKED AT INTERVALS OF APPROX 0.4° (870 POSITIONS)

4 - LEVER MAY BE ADJUSTED TO ACTUATE THE SWITCH IN THE CLOCKWISE DIRECTION ONLY, THE COUNTER-CLOCKWISE DIRECTION ONLY, OR IN BOTH DIRECTIONS △2 △5

△5 TO CONVERT SWITCH FOR ACTUATION IN EITHER CLOCKWISE OR COUNTER-CLOCKWISE DIRECTION ONLY, REMOVE THE HEAD AND SLIDE THE CAM TOWARD THE REAR OF THE HEAD SUFFICIENTLY TO DISENGAGE FROM THE FLATS ON THE SHAFT. ROTATE THE CAM 90° IN THE OPPOSITE DIRECTION OF THE ACTUATION DESIRED AND RE-ENGAGE THE CAM WITH THE FLATS ON THE SHAFT

CHARACTERISTICS

OPERATING FORCE	3 LBS. MAX.
FULL OVERTRAVEL FORCE	4 LBS. MAX.
RELEASE FORCE Ⓑ	1/4 LB. MIN.
PRETRAVEL ③	12° MAX.
DIFFERENTIAL TRAVEL ④	4° MAX.
OVERTRAVEL ⑤	60° MIN.
SWITCH-BASIC REPLACEMENT	IMKI

ELECTRICAL DATA

CONTACT ARRANGEMENT
S. P. D. T.

20 A-120.240.480 OR 600 VAC; 3/4 HP-120 VAC, 1 1/2 H.P.-240 VAC; 1/2 A-115 VDC; 1/4 A-230 VDC PILOT DUTY RATING: 600 VAC MAX.

Ⓓ

SCALE 1/2 TO 1
DO NOT SCALE PRINT

UNLESS OTHERWISE SPECIFIED
DIMENSIONS ARE IN INCHES
TOLERANCES ARE:

ONE PLACE	(.0)	±.030
TWO PLACE	(.00)	±.015
THREE PLACE	(.000)	±.005
ANGLES		±

WEIGHT