MODEL 1
LAC*-03**
LAH*-03**
LAL*-03**
LAM*-03**
LAC*-04**

SPECIFICATIONS	
ES NO.	DESCRIPTION

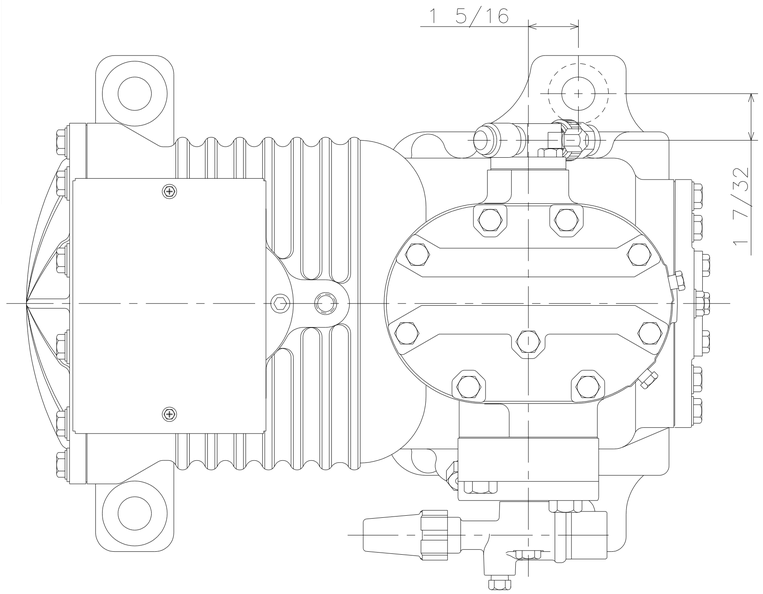

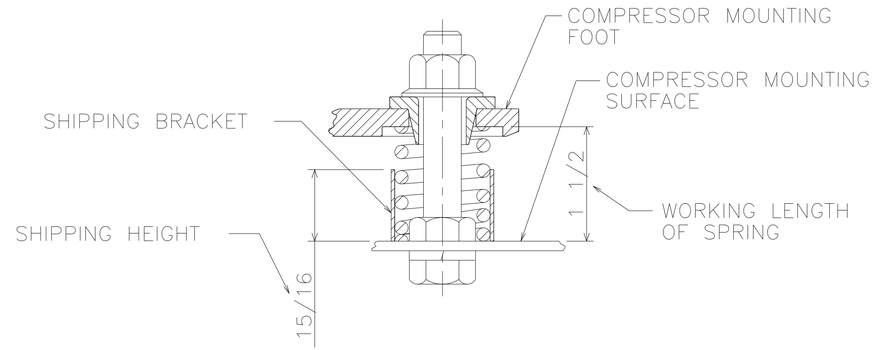

COMPRESSOR MOUNTING PARTS

NOTE:

1. ALL COMPRESSORS WITH OIL PUMP ARE INDICATED BY AN ALPHABETICAL CHARACTER IN THE FOURTH DIGIT.
2. ALL TOLERANCES ARE ±3/32 EXCEPT INDUSTRY STANDARDS APPLY TO FITTINGS AND VALVES.

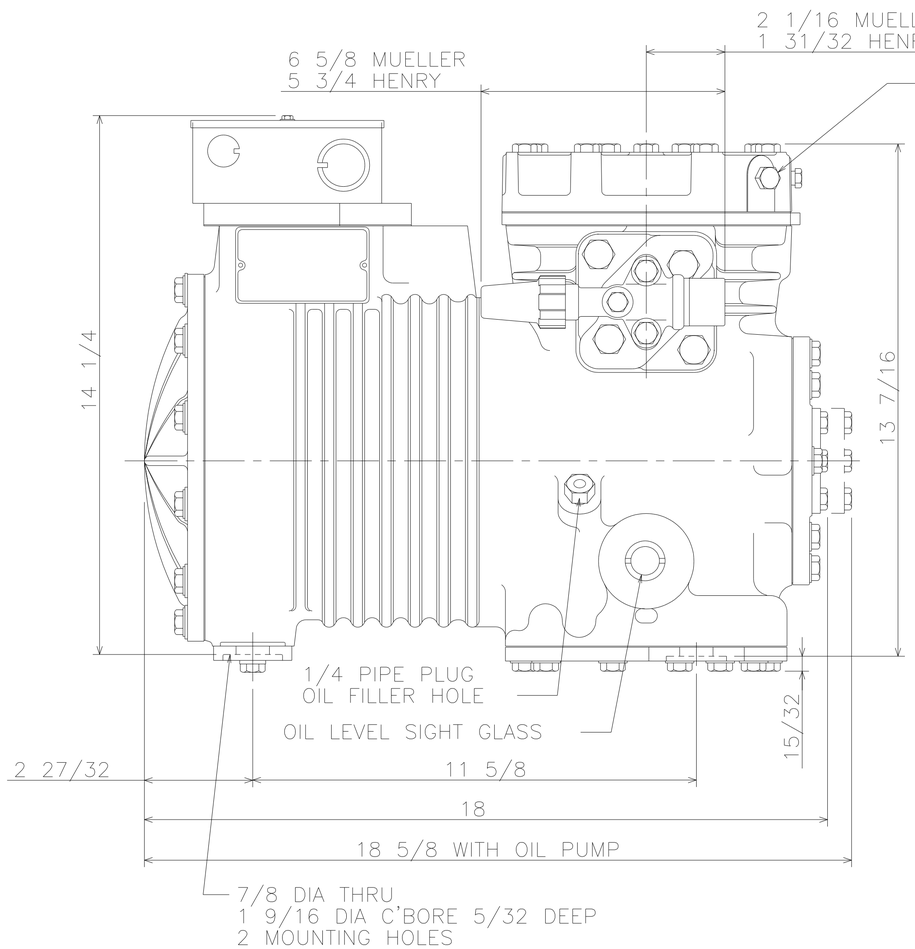

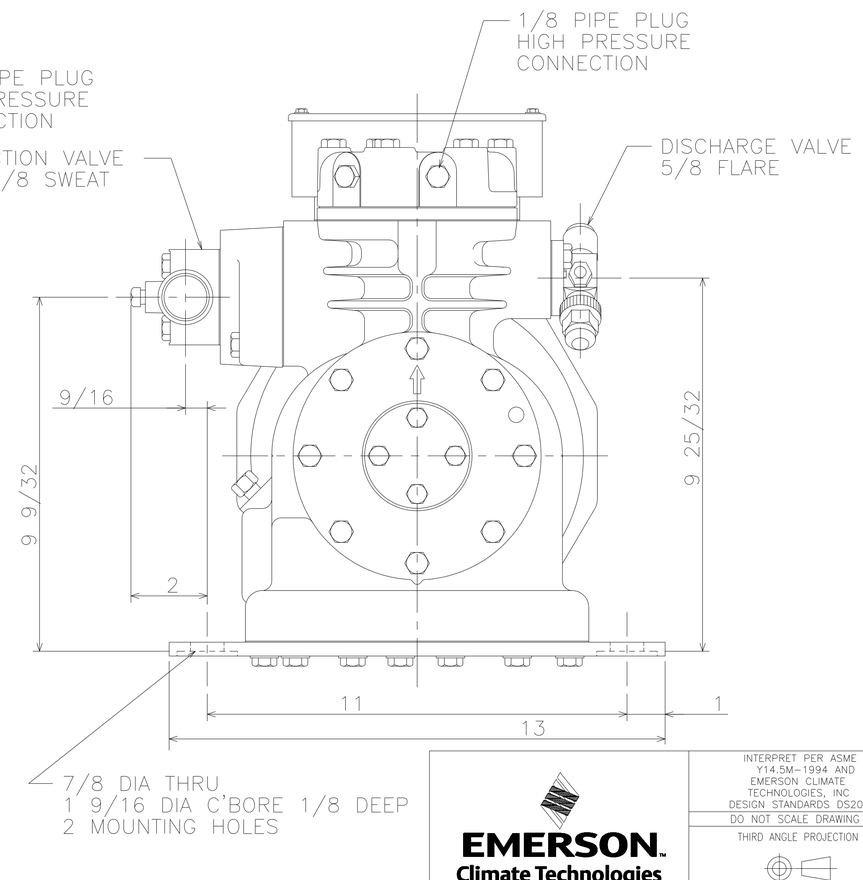

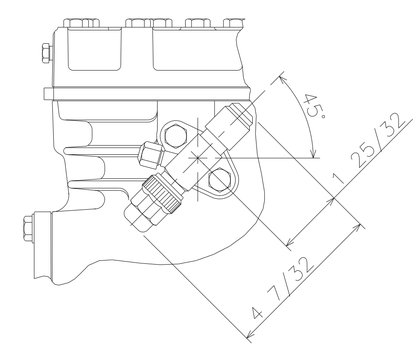

ENG NOTICE NO.	REV.NO.	REVISIONS	DATE	BY	CHKD	APPR
31-0907-049	11	REDRAWN; CHG FORMAT FOR PROJECT INC	11-22-07	MMB	CHK	RST
10-0973-011	0	RELEASED				

EMERSON Climate Technologies

Copeland brand products

INTERPRET PER ASME Y14.5M-1994 AND EMERSON CLIMATE TECHNOLOGIES, INC DESIGN STANDARDS DS2002

DO NOT SCALE DRAWING

THIRD ANGLE PROJECTION

UNLESS OTHERWISE SPECIFIED DIMENSIONS ARE INCH OR [MILLIMETER]
TOLERANCES:
2-PLACE ± N/A
3-PLACE ± N/A
ANGULAR ± N/A

8

CONFIDENTIALITY NOTICE

THIS DRAWING AND INFORMATION CONTAINED HEREIN ARE THE EXCLUSIVE PROPERTY OF EMERSON CLIMATE TECHNOLOGIES, INC. AND SHALL BE RETURNED UPON DEMAND AND SHALL NOT BE REPRODUCED IN WHOLE OR IN PART TO ANYONE ELSE OR USED, WITHOUT THE WRITTEN CONSENT OF EMERSON CLIMATE TECHNOLOGIES, INC.

MATERIAL SPECIFICATION	DRAWN BY	SUPERSEDES DWG. NO. / REV. NO.	
N/A	MMB	497-0001-00 / 10	
	DATE 11-22-07	SCALE 1:2	DATE FORMAT: MM-DD-YY

TITLE	DRAWING NUMBER SHEET 1 OF 1	DWG SIZE
REF DWG-COPE COMP ASSM	497-0001-00	4

UNCONTROLLED COPY - DO NOT MODIFY

© COPYRIGHT EMERSON CLIMATE TECHNOLOGIES, INC.- CONFIDENTIAL