TRUERH™ Series
HC-67x3 Humidity Controllers

Application Requirements

The HC-67x3 Humidity Controllers proportionally ramp their output as the humidity changes in the proportional band. The setpoint is at the low end of the proportional band for Direct Acting (DA) and at the high end for Reverse Acting (RA) (shown in Figure 1) for both wall mount and duct probe humidity controllers.

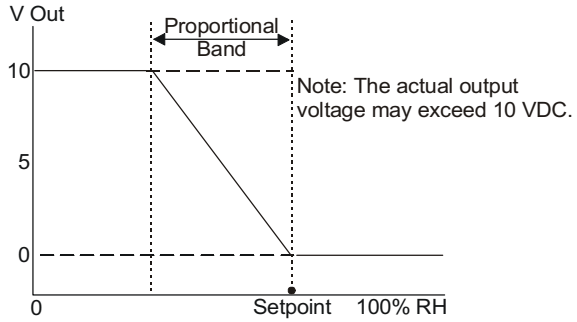

Figure 1: 0 to 10 Volt, RA Application

Configure the controller prior to installation for the following: setpoint, proportional band, action, and output signal. Proceed to the appropriate controller section.

Installation

IMPORTANT: The HC-67x3 Series Humidity Controllers are intended to provide input to equipment under normal operating conditions. Where failure or malfunction of the HC-67x3 could lead to an abnormal operating condition that could cause personal injury or damage to the equipment or other property, other devices (limit or safety controls) or systems (alarm or supervisory) intended to warn of, or protect against, failure or malfunction of the HC-67x3 must be incorporated into and maintained as part of the control system.

The controller is available in both a wall mount or duct probe package to suit a variety of sensing application needs. Refer to the *Mounting* section for a complete list of the tools required for installation.

Parts Included

- mounting base for U.S. wallbox or surface mounting
- No. 6-32 x 7/8 in. oval-head screw (2)
- No. 4-40 x 1/4 in. hex-head cover screw (in the mounting base)
- drywall clip mounting kit (includes two each No. 6-20 x 1.25 in. pan-head tapping screws, spring clips, and spacers)

Accessories

Table 1: Accessories and Replacement Parts for the Wall Mount Humidity Controller

Product Code Number	Description
ACC-DWCLIP-0	Drywall Clip Mounting Kit (10/bag)
ACC-INSL-0*	Wallbox Mounting Pad (10/bag)
ACC-INSL-1*	Surface Mounting Pad (10/bag)
GRD10A-608	Plastic Guard with Baseplate and Mounting Ring
T-4000-119	Allen-head Adjustment Tool (30/bag)
TE-67MB-600	Mounting Base Kit
TE-67D0-601**	Door Replacement Kit with Johnson Controls logo
TE-67D0-602**	Door Replacement Kit without logo

* These foam pads help prevent drafts from entering the unit through the wall and make installation easier when mounting on an uneven surface.

** Contains 10 original style and 10 new style doors.

© 2002 Johnson Controls, Inc.

Mounting

Location Considerations

IMPORTANT: To avoid damage to the circuit board and components, do not mount the unit in a location where high concentrations of corrosive vapors are present.

The HC-67x3 controller is shipped with one mounting base for both surface and wallbox mounting. To mount the HC-67x3, release the cover from the base as described in Figure 2.

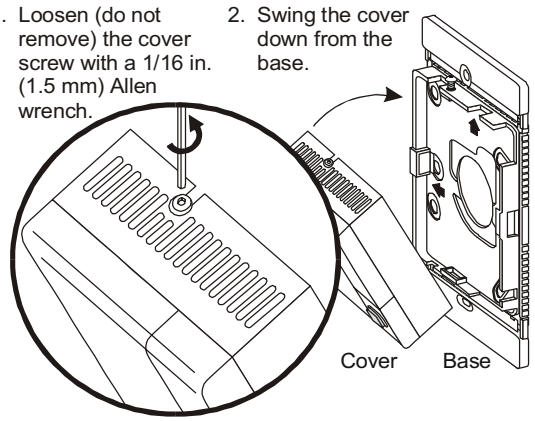

Figure 2: Removing the Cover from the Base

Wallbox Mounting: Special Tools Needed

Use a 1/16 in. (1.5 mm) Allen wrench or T-4000-119 Allen-head adjustment tool for mounting.

Wallbox Mounting: Location Considerations

Locate the humidity transmitter on an inside wall, free from drafts, and out of direct sunlight. The HC-67x3 is shock and vibration resistant; however, be careful not to drop or mount the unit where it could be exposed to excessive vibration. The following ambient operating conditions apply:

- Temperature: 32 to 122°F (0 to 50°C)
- Humidity: 0 to 100% Relative Humidity (RH), non-condensing; 85°F (29°C) maximum dew point

To mount the HC-67x3 to a wallbox:

1. Pull the cable or wiring through the wallbox and base.
2. Rotate the mounting base, so one of the arrows on the base points up.
3. Fasten the base to the wallbox with the No. 6 screws provided. (See Figure 3.)

Note: These instructions assume a standard 2 x 4 in. (52 x 104 mm) U.S. wallbox is used.

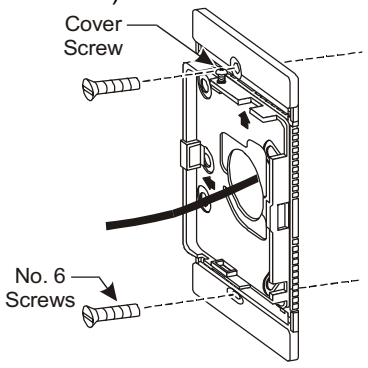

Figure 3: Wallbox Mounting

4. Place the bottom edge of the cover against the bottom lip of the base, and rotate it up onto the base. (See Figure 4.)
5. Tighten the cover screw.

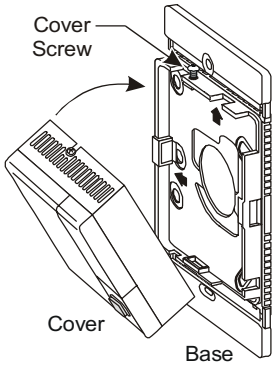

Figure 4: Attaching the Cover to the Base

Note: Once installed, the unit cannot be removed from the wall unless the cover screw is loosened as described in Figure 2.

IMPORTANT: Seal the drilled hole or use an ACC-INSL-0 Foam Pad Kit to help reduce drafts entering the unit. (See Table 1.) Drafts could result in false readings.

Surface Mounting: Special Tools Needed

- hole saw with 1-3/8 in. (35 mm) diameter blade
- 1/16 in. (1.5 mm) Allen wrench or T-4000-119 Allen-head adjustment tool
- drill with 1/8 in. (3 mm) drill bit

To mount the surface model to drywall, refer to Figure 6 and proceed as follows:

1. Bend the top and bottom edges of mounting base at the perforations until they break off. (See Figure 5.)
2. Drill a 1-3/8 in. (35 mm) hole in the surface where the unit is to be mounted, and pull the wiring through the drilled hole.
3. Mark the location of the two mounting screws, and drill the holes.
4. Insert the spring clips on each side of the drilled 1-3/8 in. (35 mm) hole, and use the spacers if needed as shown in Figure 6. Do not use the spacers for 5/8 in. (16 mm) drywall.

Note: For replacement spring clips, spacers, and screws, order the ACC-DWCLIP-0 Drywall Clip Mounting Kit. (See Table 1.)

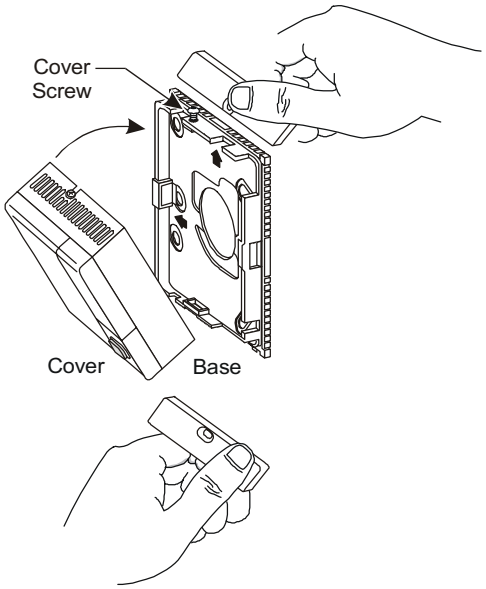

Figure 5: Removing the Breakaway Tabs

5. Pull the wiring through the base of the unit.
6. Center the two holes in the base over the two drilled holes, and fasten the base to the drywall using the No. 6 screws provided. (See Figure 6.)
7. Place the bottom edge of the cover against the bottom lip of the base, and rotate it up onto the base as shown in Figure 4.
8. Tighten the cover screw.
9. Once installed, the HE-67xx cannot be removed from the wall unless the cover screw is loosened as described in Figure 2.

IMPORTANT: To prevent drywall damage, do not overtighten the screws.

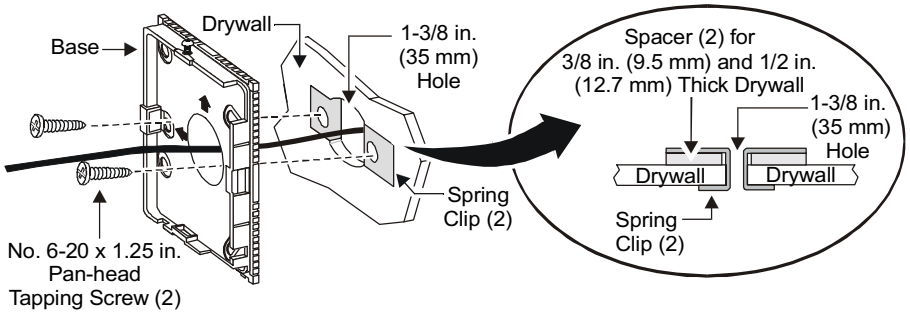

Figure 6: Surface Mounting to Drywall

Duct Probe Humidity Controller: Parts Included

- HC-6703-6N00P duct probe humidity controller
- No. 8 x 1 in. Phillips-head sheet metal screw (2)
- washer for use with conduit fitting

Note: Conduit fitting and nut are not provided.

Duct Probe Humidity Controller:Special Tools Needed

- hole saw with 1 in. (25 mm) diameter blade
- drill with 1/8 in. (3 mm) drill bit
- 1/8 in. (3 mm) flat-blade and No. 2 Phillips screwdrivers
- pliers
- gasket, sealer, or other material to seal the area between the unit and the duct

Duct Probe Mounting Location Considerations

Place the duct probe humidity controller in a location that complies with the following:

- Position: Designed for duct mounting in any position, except with the probe tip pointed up.
- Duct Diameter: Recommended minimum diameter (round ducts) or width (square ducts) is 12 in. (305 mm).
- Air Stratification (when the unit is mounted on the discharge side of the fan): Recommended location is at least 8 ft (2.4 m) downstream from the humidification equipment, where duct air and water vapor are sufficiently mixed. Avoid areas where the probe may be exposed to condensation.

To mount the duct probe humidity controller, refer to Figure 7, and proceed as follows:

1. Remove any excess insulation from the duct that prevents the probe from extending a minimum of 3 in. (76 mm) into the air stream.
2. Use the hole saw to make a 1 in. (25.4 mm) hole in the duct for inserting the probe.
3. Pull the plastic cover off the housing.

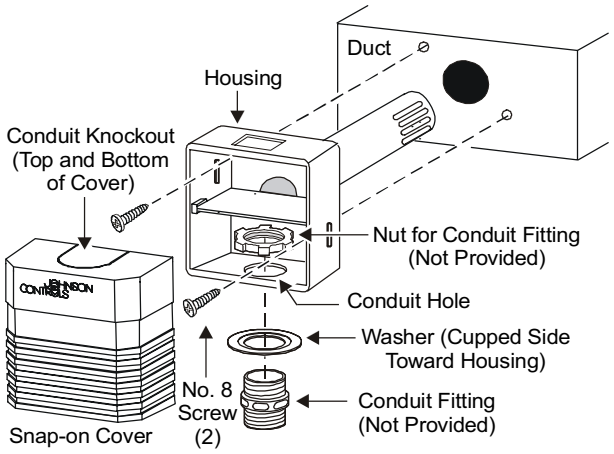

Figure 7: Mounting and Assembly

4. Insert the probe into the duct, and mark the location of the holes for the mounting screws.
5. Remove the unit, and drill a 1/8 in. (3 mm) hole for each mounting screw.

IMPORTANT: Remove the unit before drilling to prevent any metal remnants from falling onto the circuit board. Seal any holes created during installation to help reduce drafts and for more accurate humidity readings.

6. Use a gasket, sealer, or other means to seal the area around the 1 in. (25.4 mm) hole between the unit and the duct.
7. Reinsert the probe, and secure the housing to the duct using the two No. 8 screws provided.

Wiring

CAUTION: Risk of Equipment Damage. Disconnect the power supply before wiring connections are made to prevent damage to the equipment.

Make all wiring connections using No. 18 AWG wire and in accordance with the National Electrical Code and all local regulations.

Wall Mount Humidity Controller

To wire the wall mount model, refer to Figure 8, and proceed with the terminal connections.

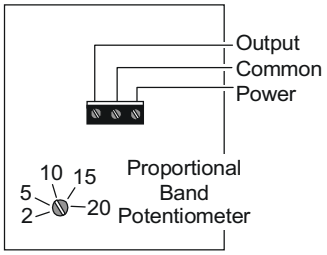

Figure 8: Wiring and Proportional Band Setting

Duct Probe Humidity Controller

To wire the duct probe model, refer to Figure 9, and proceed as follows:

IMPORTANT: If using a conduit fitting (not provided), use the washer provided to support the fitting in the housing. If the washer is not used, the fitting could stress the plastic housing.

1. Route the wires from the equipment to the unit through the conduit hole in the housing shown in Figure 7.
2. Break out the appropriate knockout from the cover, shown in Figure 7, using pliers to accommodate the wiring or conduit.
3. Press the cover onto the base.

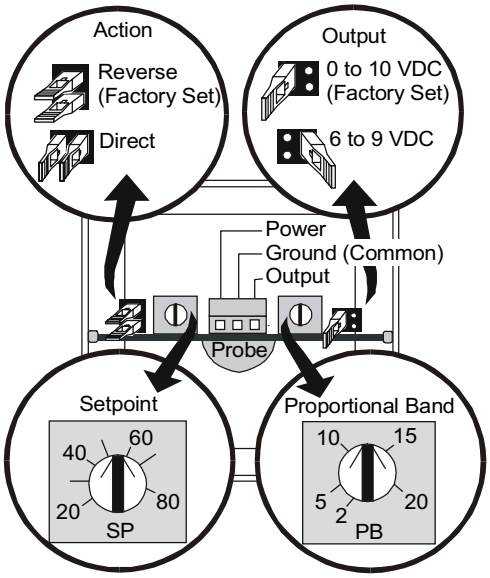

Figure 9: Settings on a Duct Probe Humidity Controller

Setup and Adjustments

Wall Mount Humidity Controller

Setpoint

Adjust the setpoint using the setpoint adjustment lever shown in Figure 10. To open the access door, push down on the pull-tab, and pull the door open.

IMPORTANT: To prevent unauthorized adjustment of the setpoint, install an optional plastic guard. (See Table 1 for ordering information.)

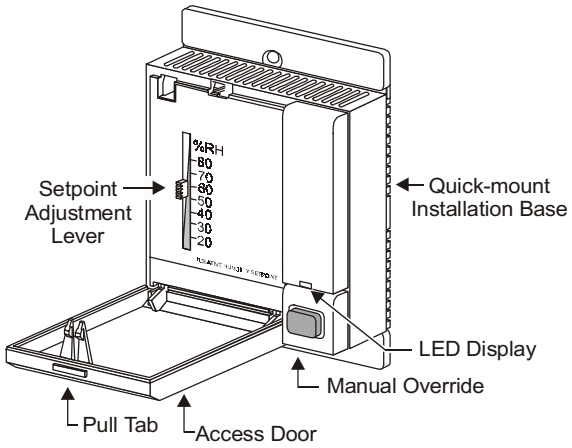

Figure 10: Accessing the Setpoint

Jumpers

To set the jumpers, refer to Figure 11. Turn the circuit board over, and position the action and output jumpers to suit the application. Reinstall the circuit board.

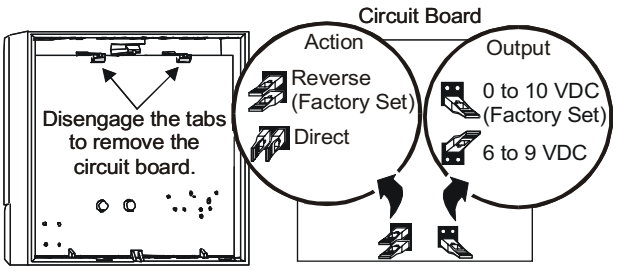

Figure 11: Jumper Settings

Proportional Band

To set the proportional band, see Figure 8. Use a 1/8 in. (3 mm) flat-blade screwdriver to turn the potentiometer to the position desired.

Duct Probe Humidity Controller

Setpoint, Proportional Band, and Jumpers

Refer to Figure 9 to change the setpoint, proportional band, or the action and output jumpers for the application desired.

1. Use a 1/8 in. (3 mm) flat-blade screwdriver to turn the setpoint or proportional band potentiometer to the desired setting.
2. Select the appropriate control action and output setting using the jumpers.

Troubleshooting

If the humidity controller is not functioning properly:

1. Verify the unit is mounted in a location that is indicative of space humidity (away from drafts and sunlight, for example).
2. Check all supply voltage connections, and make sure the wiring is correct. (Refer to Figure 8 and Figure 9.)
3. Check the proportional band and setpoint settings. If the humidity control equipment is cycling excessively, the proportional band setting may be too low.
4. Verify the jumper positions. If the unit is not delivering an output, make sure the jumpers are appropriately selected for the application.
5. Replace the unit if the troubleshooting suggestions fail to remedy the problem.

Repairs and Replacement

The HC-67x3 units are not field repairable. As with any electrical device, keep the air vents clean and free from dust or obstruction. The HC-67x3 controllers have been designed for maintenance-free operation. Sturdy packaging, solid-state components, and high-quality element construction combine for a long-lasting, high performance sensor. To order replacement parts, contact the nearest Johnson Controls representative.

Technical Specifications

Product	TRUERH Series HC-67x3 Humidity Controllers	
Power Requirements	14 to 30 VDC at 10 mA or 20 to 30 VAC, 50/60 Hz at 15 mA with no load, Class 2	
Control Action	Jumper selectable, direct or reverse (factory set for reverse acting)	
Output Range	Jumper selectable, 0 to 10 VDC (factory set) or 6 to 9 VDC; 5 k ohm minimum load impedance	
Humidity	Element: Sensing Range: Setpoint: Proportional Band:	All-Polymer™ element 0 to 100% RH, non-condensing Adjustable from 20 to 80% RH Adjustable from 2 to 20% RH
Temperature Coefficient	-0.1 to 0.05% RH/°C at 5°C (41°F) to -0.07 to -0.21% RH/°C at 65°C (149°F)	
Electrical Connections	3-position screw terminal block	
Ambient Operating Conditions	32 to 122°F (0 to 50°C) 0 to 100% RH, non-condensing; 85°F (29°C) maximum dew point	
Survival Operating Conditions	-22 to 140°F (-30 to 60°C) 0 to 100% RH, non-condensing; 85°F (29°C) maximum dew point	
Ambient Storage Conditions	-40 to 176°F (-40 to 80°C) 0 to 100% RH, non-condensing; 85°F (29°C) maximum dew point	
Materials	Wall Mount: Duct Probe:	White plastic enclosure for surface or wallbox mounting, including hardware Light gray plastic cover with dark gray plastic housing and probe
Dimensions	Wall Mount (H x W x D): Duct Probe (H x W x D): Probe (L x D):	3.20 x 3.20 x 1.34 in. (81 x 81 x 34 mm) 3.25 in. x 3.25 in. x 8.27 in. (83 mm x 83 mm x 210 mm) 6.25 in. x 0.98 in. (159 mm x 25 mm)
Shipping Weight	0.7 lb (0.3 kg)	
Agency Compliance	Duct Probe Material:	94-5 V flammability rated per UL 94

The performance specifications are nominal and conform to acceptable industry standards. For application at conditions beyond these specifications, consult the local Johnson Controls office. Johnson Controls, Inc. shall not be liable for damages resulting from misapplication or misuse of its products.

JOHNSON CONTROLS

Controls Group
507 E. Michigan Street
P.O. Box 423
Milwaukee, WI 53201

Published in U.S.A.
www.johnsoncontrols.com