TRUERH™ Series HC-67x3 Humidity Controllers

The TRUERH™ Series HC-67x3 Humidity Controllers come in both wall or duct mount packages. These attractively styled controllers offer ease of installation and application flexibility. The patented All-Polymer™ humidity sensor construction improves resistance to chemical corrosion.

The HC-67x3 functions as a proportional humidity controller.

The output is jumper-selectable Reverse Acting (RA) or Direct Acting (DA), along with an adjustable setpoint and proportional band.

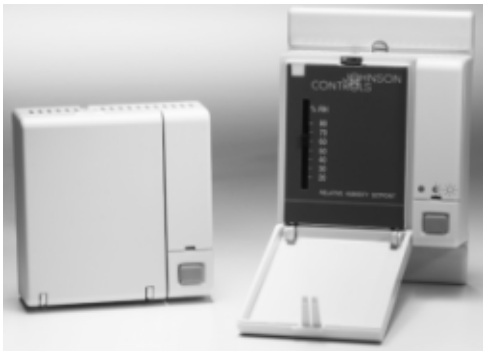

Figure 1: HC-6703-4N00W Wall Mount Humidity Controller



Figure 2: HC-6703-6N00P Duct Probe Humidity Controller

Features and Benefits	
❑ **TRUERH Technology**	Features patented improvements in circuitry and calibration techniques
❑ **All-Polymer Humidity Sensor**	Provides accurate and reliable humidity sensing with the patented sensing element
❑ **Jumper-Selectable RA or DA Output: 0 to 10 or 6 to 9 VDC**	Maximizes control and application flexibility
❑ **RH Adjustable Setpoint Range and Proportional Band**	Allows local setpoint adjustment and provides application versatility
❑ **All Plastic Material for Duct Probe**	Improves thermal performance and complies with Underwriters Laboratories® Inc. (UL) flammability ratings for plenum use

© 2002 Johnson Controls, Inc.

Product Overview

IMPORTANT: The HC-67x3 Series Humidity Controllers are intended to provide input to equipment under normal operating conditions. Where failure or malfunction of an HC-67x3 Series controller could lead to an abnormal operating condition that could cause personal injury or damage to the equipment or other property, other devices (limit or safety controls) or systems (alarm or supervisory) intended to warn of, or protect against, failure or malfunction of the HC-67x3 Series controller must be incorporated into and maintained as part of the control system.

The HC-67x3 controller comes in both a wall mount and a duct-probe package to suit a variety of sensing application needs. Both humidity controllers feature a quick-mount design that saves time and simplifies installation.

A combination wallbox and surface mounting base connects to the unit for easy mounting directly to either drywall (spring clips provided) or a standard U.S. wallbox. All wiring connections for the humidity transmitters terminate on terminal blocks.

The Johnson Controls TRUERH duct package offers an all plastic enclosure, which reduces thermal biasing. This feature lowers energy consumption, reduces condensation, and eliminates the need for thermal compensation.

The HC-67x3 humidity controller proportionally ramps its output as the measured humidity changes in the proportional band. The setpoint is at the low end of the proportional band for a DA controller and at the high end for an RA controller. See Figure 3 for a typical application.

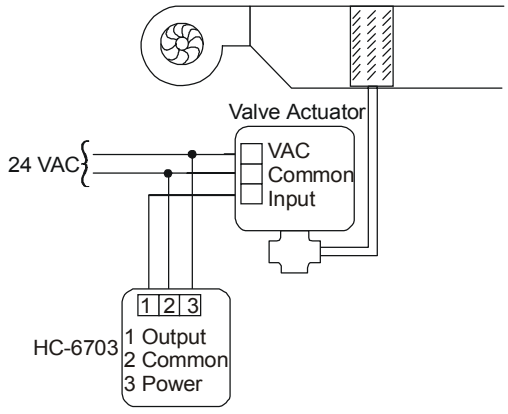

Figure 3: Typical HC-6703 Application

Dimensions

Refer to Figure 4 or Figure 5 for humidity controller dimensions.

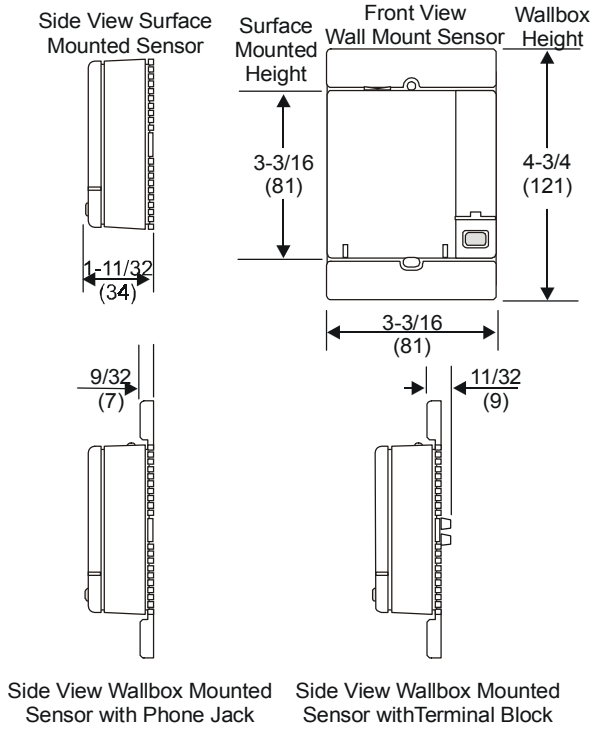

Figure 4: Wall Mount Humidity Controller Dimensions, in. (mm)

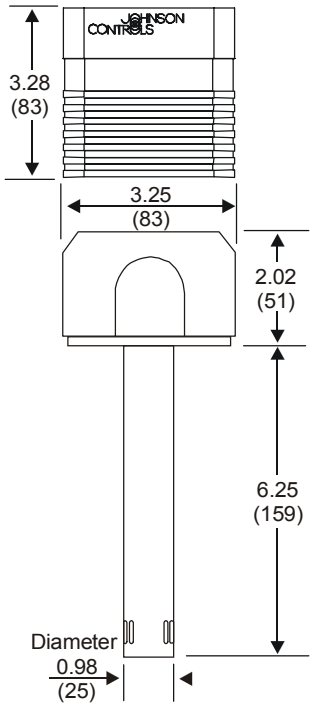

Figure 5: Duct Probe Humidity Controller Dimensions, in. (mm)

Repair and Replacement

The HC-67x3 Series wall mount and duct probe humidity controllers are not field repairable. See the *Ordering Information* section to order a replacement.

Ordering Information

Contact the nearest Johnson Controls representative to order a humidity controller, and specify the desired product code number from Table 1. Refer to Table 2 for accessories and replacement parts available for the wall mount humidity controller. (No accessories exist for the duct-probe model.)

Table 1: Humidity Controllers

Product Code Number	Description
HC-6703-4N00W	Wall Mount Humidity Controller
HC-6703-6N00P	Duct-Probe Humidity Controller

Table 2: Accessories and Replacement Parts for a Wall Mount Humidity Controller

Product Code Number	Description
ACC-DWCLIP-0	Drywall Spring-Clip Mounting Kit (10 per bag)
ACC-INSL-0*	Foam Pad Kit for Wallbox Mounting (10 per package)
ACC-INSL-1*	Foam Pad Kit for Surface Mounting (10 per package)
GRD10A-608	Plastic Guard with Baseplate and Mounting Ring
T-4000-119	Allen-Head Adjustment Tool (30 per bag)
TE-67MB-600	Mounting Base Kit
TE-67D0-601**	Door Replacement Kit with Johnson Controls logo
TE-67D0-602**	Door Replacement Kit without logo

* These foam pads help prevent drafts from entering the unit through the wall, and make installation easier when mounting on an uneven surface.

** Contains 10 original style and 10 new style doors.

Technical Specifications

Product	TRUERH Series HC-67x3 Humidity Controllers	
Power Requirements	14 to 30 VDC at 10 mA or 20 to 30 VAC, 50/60 Hz at 15 mA with no load, Class 2	
Control Action	Jumper selectable, direct or reverse (factory set for reverse acting)	
Output Range	Jumper selectable, 0 to 10 VDC (factory set) or 6 to 9 VDC; 5 k ohm minimum load impedance	
Sensor Characteristics	Element Material: Sensing Range:	All-Polymer 0 to 100% RH, noncondensing
User Adjustments	Setpoint: Proportional Band:	Adjustable from 20 to 80% RH Adjustable from 2 to 20% RH
Temperature Coefficient	-0.1 to 0.05% RH/°C at 5°C (41°F) to -0.07 to -0.21% RH/°C at 65°C (149°F)	
Electrical Connections	3-position screw terminal block	
Ambient Operating Conditions	32 to 122°F (0 to 50°C) 0 to 100% RH, noncondensing; 85°F (29°C) maximum dew point	
Survival Operating Conditions	-22 to 140°F (-30 to 60°C) 0 to 100% RH, noncondensing; 85°F (29°C) maximum dew point	
Ambient Storage Conditions	-40 to 176°F (-40 to 80°C) 0 to 100% RH, noncondensing; 85°F (29°C) maximum dew point	
Materials	Wall Mount: Duct Probe:	White PC/ABS plastic enclosure and mounting base for surface or standard U.S. wallbox mounting, including hardware Light gray plastic cover with dark gray housing and probe
Dimensions	Wall Mount (H x W x D): Duct Probe (H x W x D): Probe (L x D):	3.20 x 3.20 x 1.34 in. (81 x 81 x 34 mm) 3.28 x 3.25 x 8.27 in. (83 x 83 x 210 mm) 6.25 x 0.98 in. (159 x 25 mm)
Shipping Weight	0.7 lb (0.3 kg)	
Agency Compliance	Duct Probe Material: 94-5V flammability rated per UL 94	

The performance specifications are nominal and conform to acceptable industry standards. For application at conditions beyond these specifications, consult the local Johnson Controls office. Johnson Controls, Inc. shall not be liable for damages resulting from misapplication or misuse of its products.

JOHNSON CONTROLS

Controls Group
507 E. Michigan Street
P.O. Box 423
Milwaukee, WI 53201

Published in U.S.A.
www.johnsoncontrols.com